CER MODULATING

WALL HUNG ELECTRIC BOILER

INSTRUCTION MANUAL
MODELS SPM CE01P1-5.12 - SPM CE01P3-5.12

ATLANTIC BOILERS
HIGH EFFICIENCY BOILER-PLANT

ATLANTIC 2000 - boilerplant sales ACM ATLANTIC - commissioning and maintenance ATLANTIC 4422 – spares
Atlantic 2000 Registered in England Company No: 1477687 Vat Reg No: 306 0653 89
PO BOX 11, ASHTON UNDER LYNE, OL6 7TR **T:** 0161 621 5960 **E:** technical@atlanticboilers.com **www.atlanticboilers.com**

CER ELECTRIC BOILER MANUAL

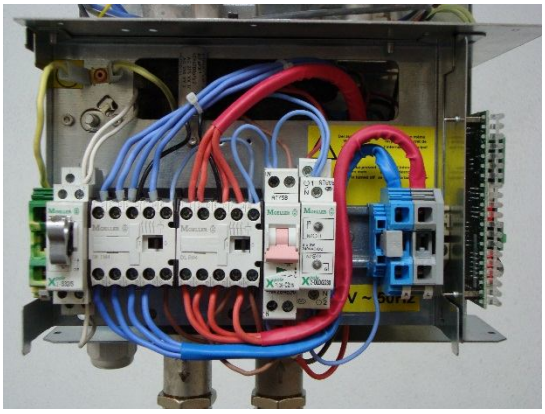

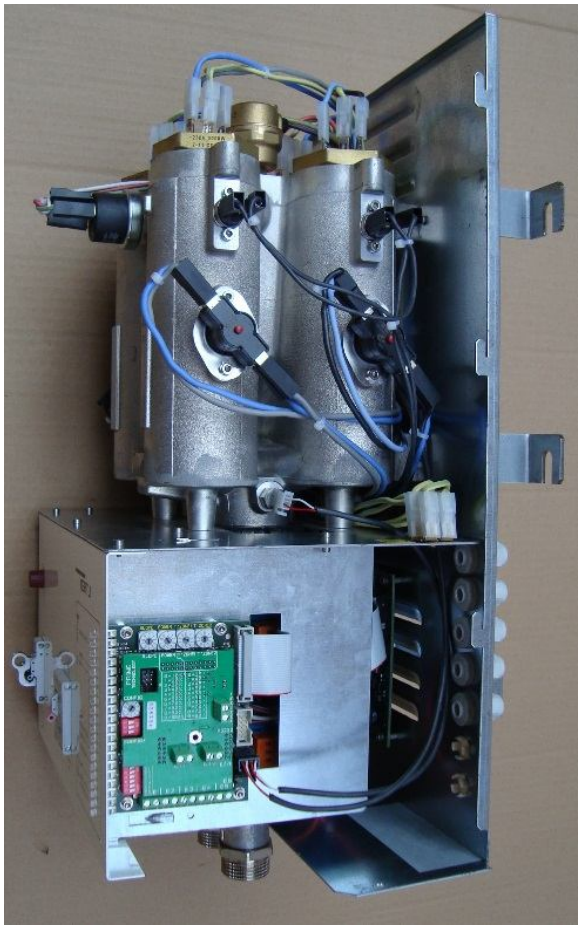

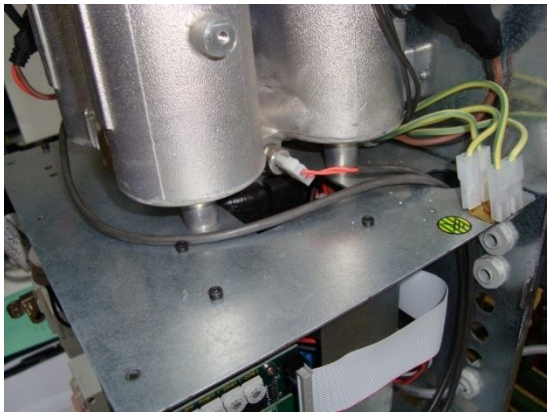

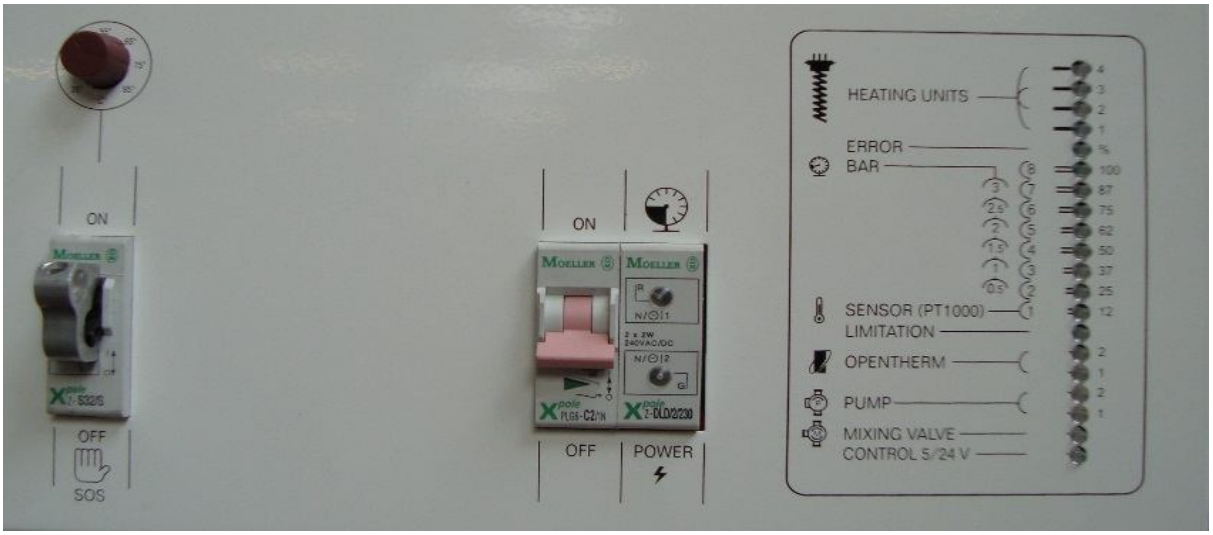

ATLANTIC BOILERS
HIGH EFFICIENCY CONDENSING BOILER PLANT

1. THE CER ELECTRIC BOILER

1. **THE CER ELECTRIC BOILERS**

MODEL	VOLTAGE	OUTPUT	AMPERAGE	CABLE SIZE
SPM CEO1P1-5.8	240V 1phase	0 – 8kW	40 amps	10mm2 3-wire separate insulation
SPM CEO1P1-5.12	240V 1phase	0 – 12kW	60 amps	16mm2 3-wire separate insulation
SPM CEO1P3-5.12	415V 3phase	0 - 12kW	20 amps	6mm2 5-wire

The CER boilers are suitable for radiators, under-floor heating, added solar heat and domestic hot water
Consult ATLANTIC BOILERS for suitable circuit arrangements.

1.1 METHOD OF OPERATION

The CER boiler is designed for closed-circuit heating in both domestic and commercial installations.

Four immersion heaters are positioned within a cast aluminium-silicium heat exchanger. Turbulent water flow within the exchanger gives an optimum rate of heat transfer. With this high heat transfer, the immersion heaters comfortably work with longer life at lower temperatures. Another advantage comes from the modulating output. Conventional electrical heating switches ON/OFF throughout operation. Modulating heating means a gentle, varying load on the immersion heaters. Heating flow and return pipes are positioned at the base of the boiler.

View from left hand end

1. Four heat exchangers
2. Digital controller
3. Power output to pumps & control valve
4. Power input to the boiler
5. Terminals to PT1000 external sensors
6. Stop and limit control terminals
7. Mechanical safety valve
8. Automatic air vent
9. On/off manual control panel

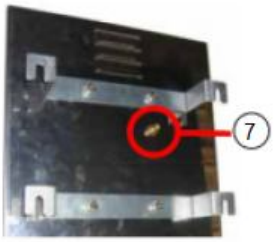

View from right hand end

1.2 IMMERSION HEATERS

Each heater is shaped in a helicoil which assists the heat transfer.There are four heaters in the boiler - each powered at 2kW or 3kW They are screwed down into the four Tubular shapes of each heat exchanger

View from above

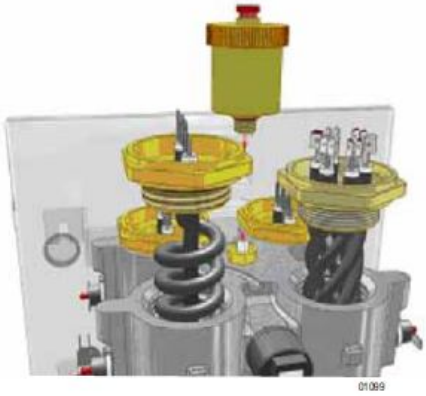

1.3 BOILER CONTROL PANEL (on lower front side of the boiler)

(1) Main Isolator
(2) Manual standby switch replacing digital control
(3) Manual standby temperature control
(4) Indicators
Red – low water pressure, manual re-set
Green – boiler energised

Single and three phase cable terminals are behind and on top of the Boiler Control Panel
The fascia panel has to be removed to enable the cable, to be laid neatly and secured

A is where the external cables enter
B remove the fascia panel to reveal cables

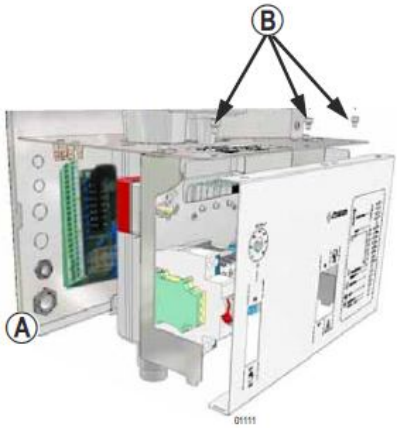

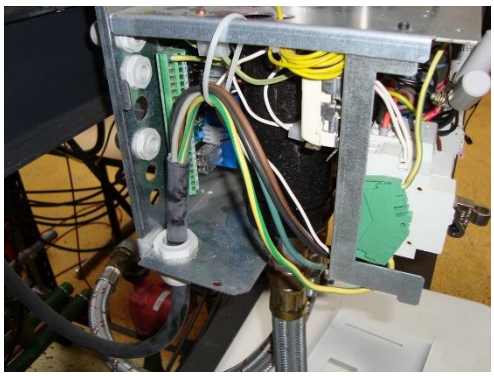

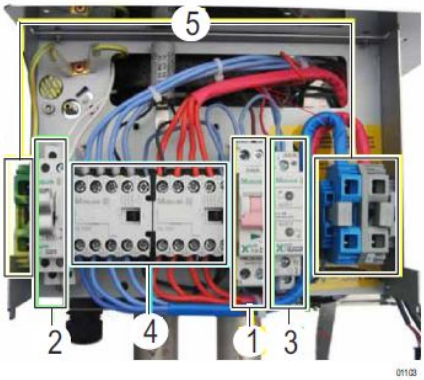

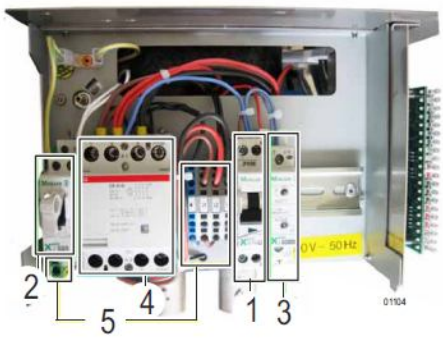

REMOVE BOILER CONTROL PANEL FASCIA REVEALING HORIZONTAL SURFACE FOR CABLE
THE MAIN ISOLATOR SWITCHES ARE MOUNTED ON A DIN RAIL
DO NOT REMOVE THE CASING WHEN THE BOILER & CONTROLS ARE ALIVE

SINGLE PHASE

1. Main Isolator
2. Standby isolator
3. Red lamp – pressure below 0.8 BARS
   Green lamp – system alive
4. Two 4-pole contactors (normally open)
5. Three cables – Earth (green/yellow)
   Neutral (blue)
   Live (grey)

THREE PHASE

1. Main Isolator
2. Standby isolator
3. Red lamp – pressure below 0.8 BARS
   Green lamp – system alive
4. One 4-pole contactors (normally open)
5. Five cables – Earth (green/yellow)
   Neutral (blue)
   3 Live (grey)

1.4 BOILER DIMENSIONS

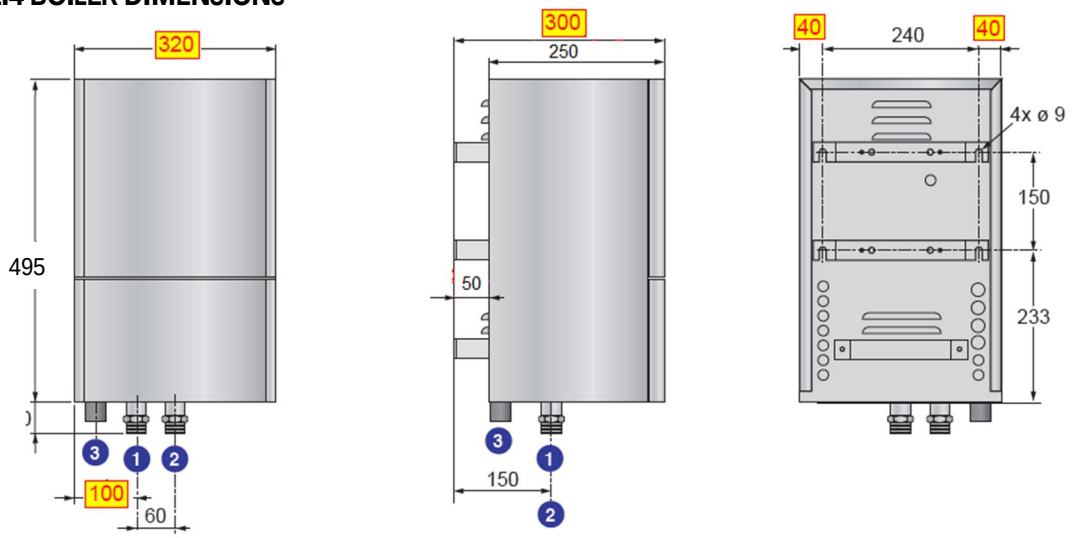

1.5 FIXING THE CER BOILER TO THE WALL

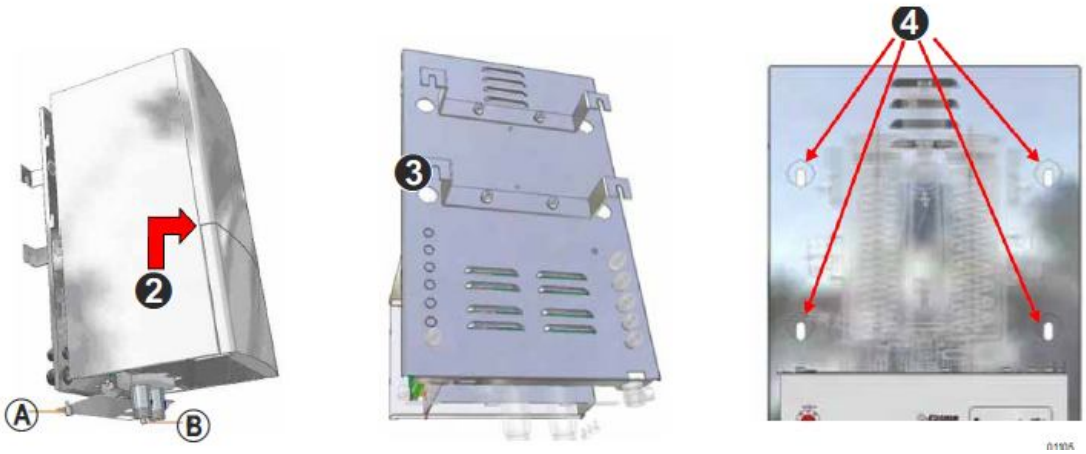

1. Remove allen screws A & B from the underside of the casing

2. Lay the boiler body on its back, remove the fascia panel and note the positions of the wall lugs
3. Fix minimum diameter 8mm screws to the wall.

4. Hang the boiler body from the screws; adjust as necessary.

1.6 HYDRAULIC CONNECTIONS

The CER boiler has 32mm flow (A) and return (B) connections from the underside.

The flow must be fitted with a safety valve, a shunt pump A dial thermometer & pressure gauge and an isolating ball valve. The return, leading into the boiler, must have an isolating ball valve, a strainer and a cold feed an expansion connection, Including the expansion vessel.

1.7 PRECAUTIONS

Fix the boiler firmly to a solid wall
Leave approximately 500mm clearance around the boiler
All electrical wiring must be installed by a qualified electrician

The boiler must receive its power supply through an isolator and a circuit breaker
The power supply cable cross-section must be sized according to the boiler power
The power supply isolator must be positioned close to the boiler for safe maintenance work
Live neutral and earth cables must be traced and labelled

The boiler must never be switched on when without casing and fixing screws
Never adjust terminal fixings when boiler alive
Do not operate in manual mode without a competent engineer being present

PUMP AND CONTROL VALVE TERMINALS (On lower left hand side of the boiler)

Heating pump P1 (single phase) is connected to (A) – L N E
Heating pump P2 (single phase) is connected to (B) – L N E

High limit – see red arrow position marked "STOP"
This has a link placed at the Factory over-riding "STOP"
Connect to a high limit thermostat located in the flow pipe for any critical system
Any high temperature sensitive space heating system and remove the link

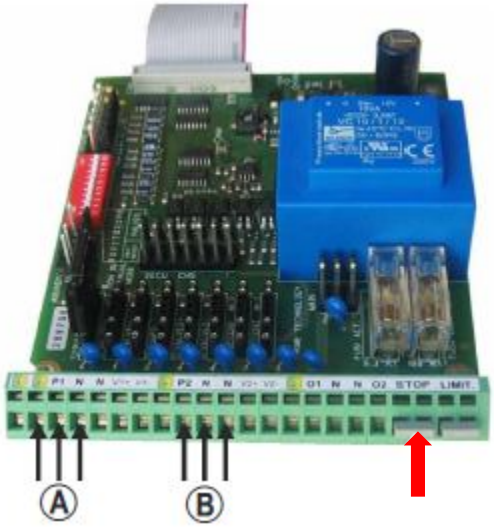

2 MIXING & BY-PASS 3-WAY VALVE TERMINALS

2.1

(A) – 2 Live, 1 neutral, 3 wires – N V1+ V1-
(B) – 2 Live, 1 neutral, 3 wires – N V2+ V2-

POWER OUTPUT

DIGITAL CONTROLLER

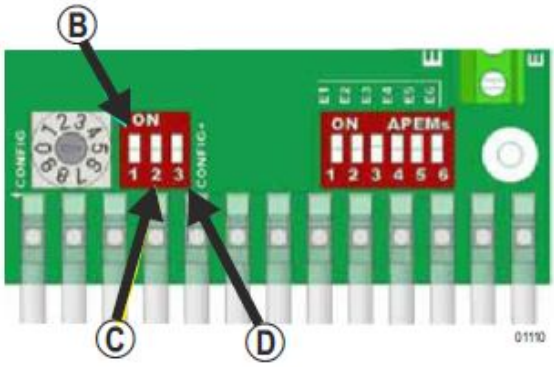

(A) - Power output limit contacts
- Bridged at the factory
- Remove bridge to limit power output to 50%
- Remove bridge to satisfy low price tariff
- Remove bridge to avoid peak period penalty

(B) Switch 1. OFF – Limit of 50% power output
ON – Power output sufficient for frost protection

(C) Switch 2. OFF – 50% boiler output if (A) is open
ON – Boiler output if (A) is closed

(D) Switch 3. OFF – Single phase supply
ON – Three phase supply

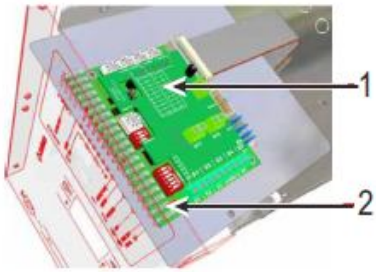

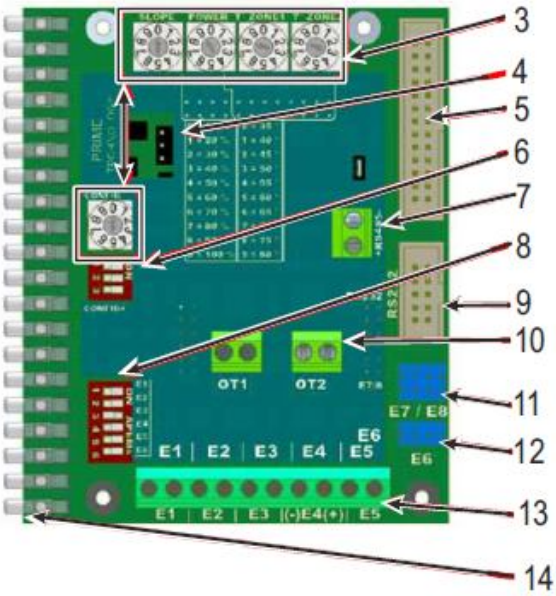

2.2 DIGITAL CONTROLLER (on lower right-hand side of boiler)

(1) Top card, on controller, provides Opentherm sensor control
(2) Lower card provides 20 indicators
(3) 5 adjustable clock codes
(4) Programme Set at factory
(5) Multi-socket Installed at factory
(6) Power limit system (see digital controller settings A & C)
(7) Not used
(8) ON/OFF for maximum 6 HTG/DHW sensor positions
(9) Not used
(10) Zone sensors OT1 & OT2
(11) E7 TO E8 for 2 Flow/return sensors (PT 1000)
(12) Not used
(13) E1 to E5 for maximum 5 sensor positions
(14) 20 LED's, 3 colours to identify system condition

2.3 EXTERNAL PT1000 SENSOR CONNECTIONS

E1 Not in use
E2 DHW temperature
Centre of vessel
E3 DHW temperature
Base of vessel
E4 Mixed flow temperature
E5 External temperature

THE DIGITAL CONTROLLER – 2 computer cards
in position

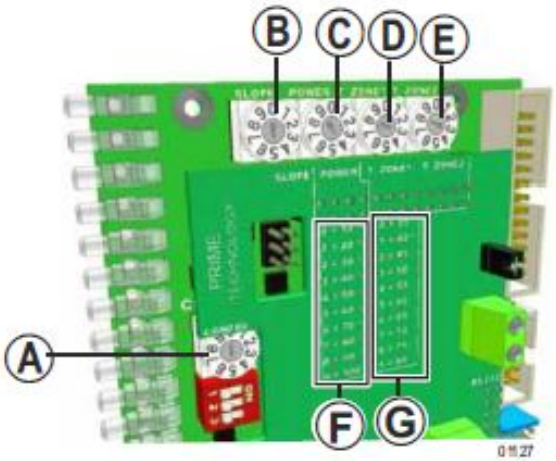

USE OF THE SETPOINTS AND CLOCK CODES

(A) Selection of chosen heating circuit
(B) Slope of weather curve
For underfloor heating setting is 0
(C) Variation in electrical power output
(D) Zone 1 setting for heating type
(E) Zone 2 setting for 2nd heating type
(F) Table of boiler power outputs
(G) Table of zone temperatures

2.4 CALIBRATION TO CLOCK CODE A (CONFIG)

0, 3, 5, 6, 7 not used
1 one zone underfloor heating (with option DHW)
2 one zone radiators (with option DHW)
4 two zones; one with radiators; one underfloor (with option DHW)
8 manual setting to dry out the boiler & space are dry
9 automatic setting to dry out the boiler & space are dry

SLOPE OF THE WEATHER CURVE – CLOCK CODE B
The Slope Facility (0 to 9) is available (9) for a radiator circuit, (0) for underfloor.

The position (0) lowers flow temperature against outside weather
The position (9) gives maximum flow temperature against outside weather

VARIATION IN ELECTRICAL POWER – CLOCK CODE C
Power variation is a percentage of the nominal output – see Table (F).

For example – for a 50% reduction of the power, adjust to setting 4

ZONE SETTINGS – CLOCK CODES (D) and (E)
The two zone flow temperatures can be separately adjusted
The temperature is selected at table G
For example: 2 circuits : 1 radiators and 1 underfloor heating

For zone 1 at 70°C; set clock code D at 7
For zone 2 at 50°C; set clock code E at 3

PLEASE NOTE that OT1 is reserved to the circuit with high temperature, also radiators
PLEASE NOTE that OT2 is reserved to underfloor heating, except for 2 radiator circuits

2.5 THE under card of the DIGITAL CONTROLLER

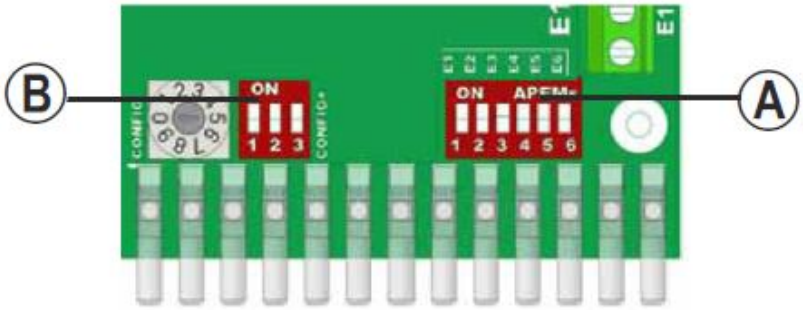

Assembly (A) - 6 connection switches

E1 not used – Factory position OFF
E2 Sensor PT1000 at base of DHW vessel (arrangement 1b & 2b). Factory position OFF
E3 Sensor PT1000 at base of DHW vessel (arrangement 4b) Factory position OFF
E4 Sensor PT1000 for regulation of the 3-way valve Factory position OFF
E5 Sensor PT1000 for external sensor – in position "ON" when connected
E6 not used – in position "OFF"

Assembly B

SWITCH 1	Position OFF	50% heat output
	Position ON	Frost Protection
SWITCH 2	ON/OFF	Reverse polarity
SWITCH 3	ON –	3 phase boiler
	OFF –	1 phase boiler

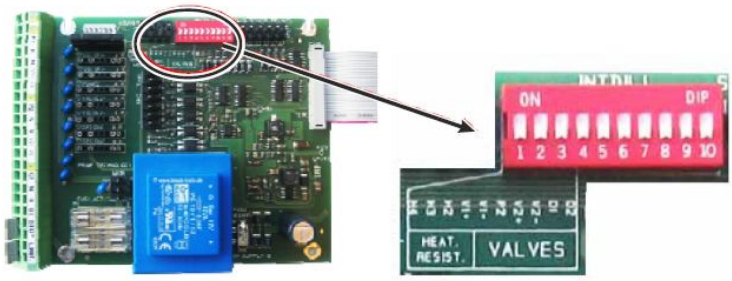

2.6 PUMP & CONTROL VALVE HAND OPERATION ONLY

The panel provides a 5 volt circuit for the digital control panel cards and a 24 volt circuit for the open therm & PT1000 sensors.

Switch assembly 1 to 10
To restrict the boiler heat output, switch off H4, H3, and H2 with all switches off, minimal heat output will remain for frost protection.
Switch assembly V1+ V1- V2-, 01, 02 to fix the position of the 3 valves

2.7 ELECTRONIC RELAYS

Electronic relays operate each pump, each 3-way mixing valve and each 2-position valve.

Each valve has 2 power and 2 control contacts.

See (A) the output power control panel has one relay

See (B) the digital controller has one terminal marked P1 for pump 1 and one terminal also marked P2 for pump2 see (D)

See (C) the 3-way valve require two terminals marked V1 for zone 1 and terminals marked V2 for zone 2

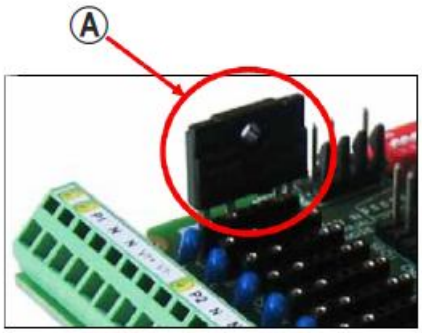

2.8 DRYING OUT THE NEW BUILDING

		35°C		
	30°C		30°C	
25°C				25°C
2 days	2 days	4 days	2 days	2 days

Modest flow temperature should be used.
Set clock code (A) on 9 to give automatically
48 hours at 25°C,
then 48 hours at 30°C, then 96 hours at 35°C
then 48 hours at 30°C, then 48 hours 25°C
then 48 hours at 20°C – see graph below

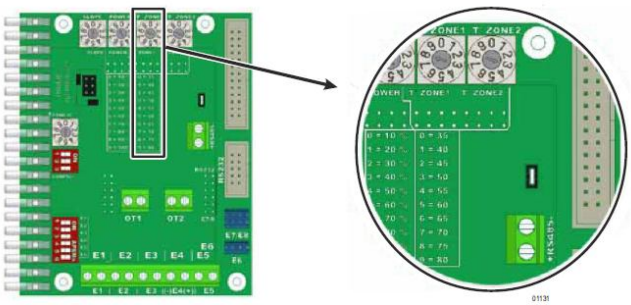

SELECTION OF HEATING CIRCUITS

1a. One underfloor heating zone
1b. One underfloor heating zone & DHW

2a. One radiator heating zone
2b. One radiator heating zone & DHW

3. One radiator zone and one underfloor heating zone
4. One radiator zone and one underfloor heating zone & DHW

1a. One underfloor heating zone

1 CER Boiler
2 Isolating valve
3 Pump
4 High limit stat
5 Underfloor heating
6 Circuit return valve
7 Drain valve
8 Expansion vessel
9 Cold feed
10 Pressure regulator
11 Safety valve
12 Open therm flow thermostat
13 Automatic air vent
14 Pressurisation unit

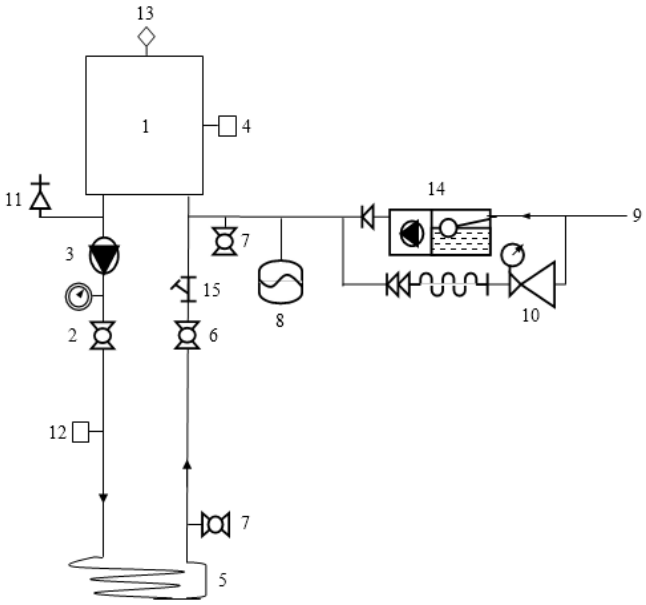

POWER CONTROL

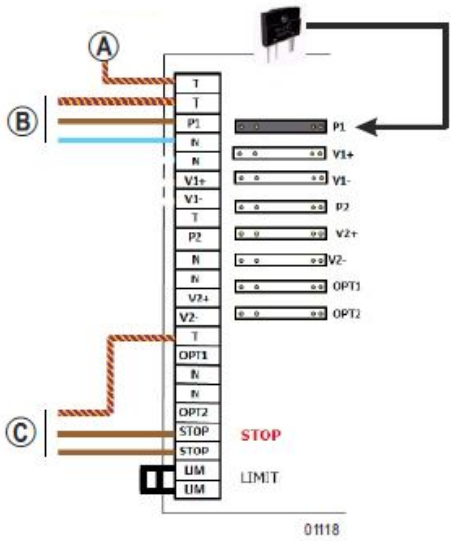

DIGITAL CONTROL

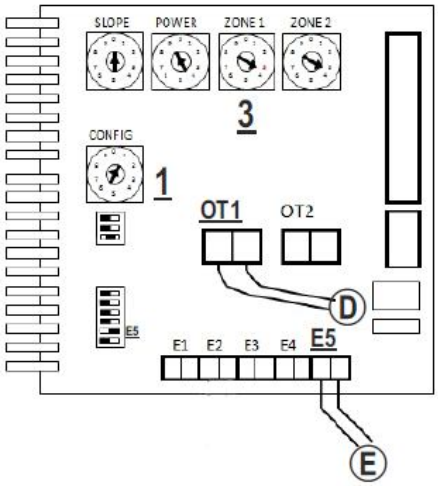

A Earth
B Pump
C Flow temperature limit
D Open therm
E External sensor

1b. One underfloor heating zone & DHW

1 CER Boiler
2 Isolating valve
3 Pump
4 High limit stat
5 Underfloor heating
6 Circuit return valve
7 Drain valve
8 Expansion vessel
9 Cold feed
10 Pressure regulator
11 Safety valve
12 Open therm flow thermostat
13 Automatic air vent
14 Domestic hot water indirect cylinder
15 Primary heating coil
16 PT1000-ET domestic hot water sensor
17 3-way motorised valve

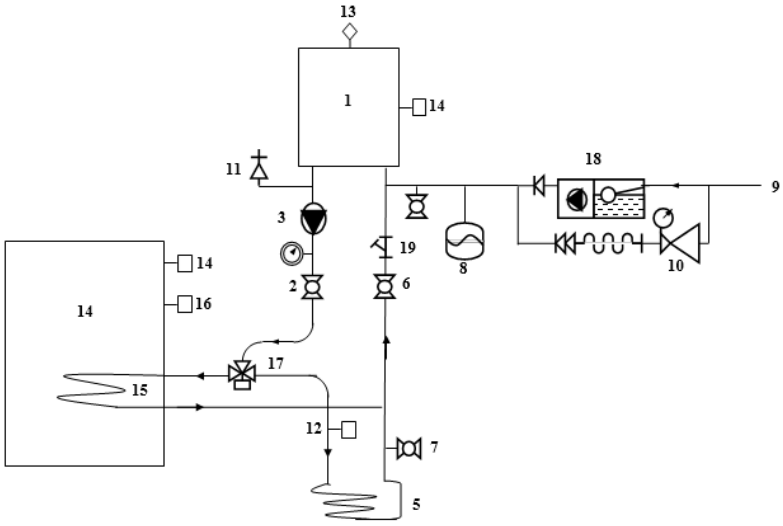

POWER CONTROL

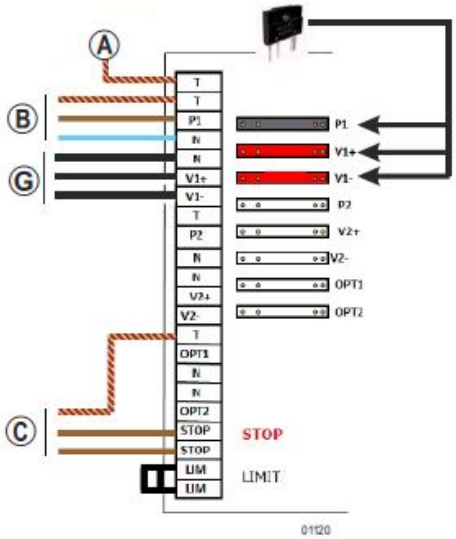

DIGITAL CONTROL

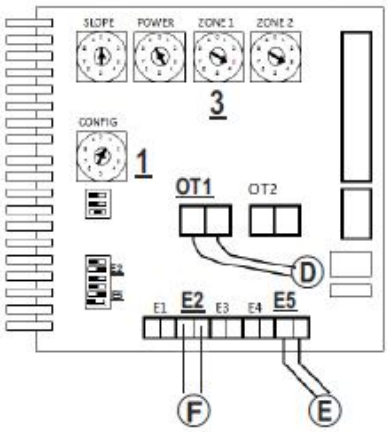

A Earth
B Pump
C Flow temperature limit
D Open therm 1
E External sensor
F Sensor ECS PT1000
G 3-way valve

2a. One radiator heating zone

1 CER Boiler
2 Isolating valve
3 Pump
4 Strainer
5 Pressurisation unit
6 Drain valve
7 Safety valve
8 Expansion vessel
9 Cold water supply
10 Pressure regulating valve
11 Circuit return valve
12 Open therm flow thermostat
13 automatic air vent
14 Radiators

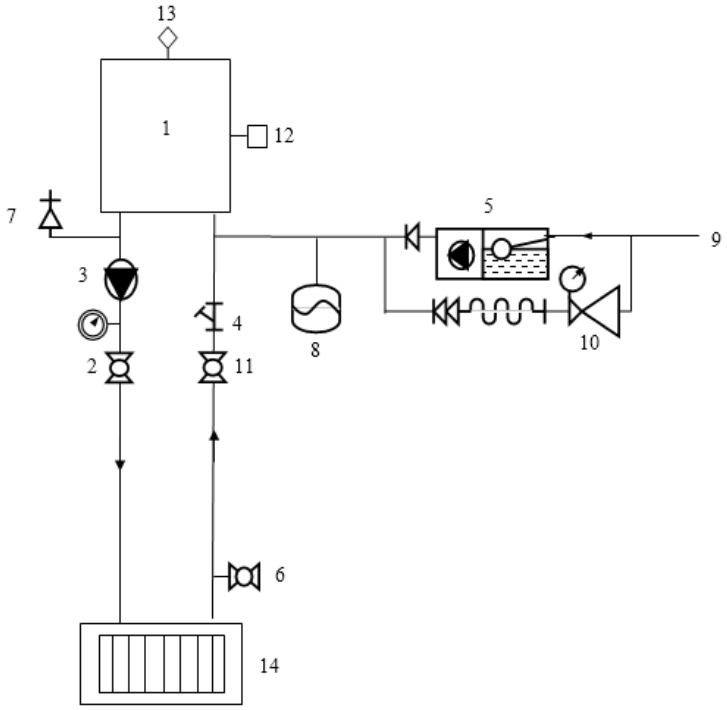

POWER CONTROL

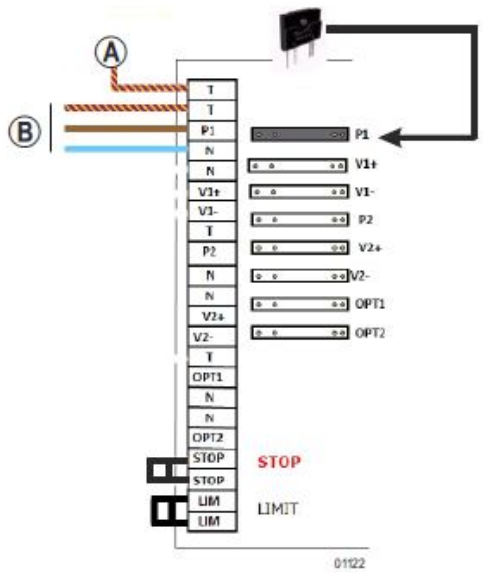

DIGITAL CONTROL

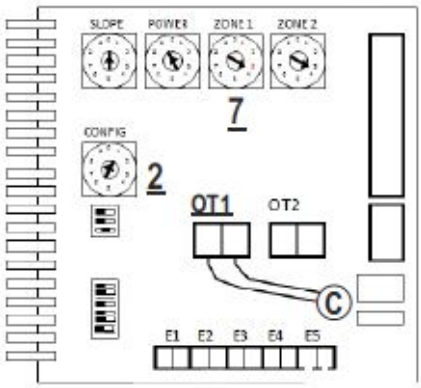

A Earth
B Pump
C Flow temperature limit

2b. One radiator heating zone & DHW

1 CER Boiler
2 Isolating valve
3 Pump
4 DHW indirect cylinder
5 Primary heat exchanger
6 Main system drain
7 Safety valve
8 Expansion vessel
9 Cold water supply
10 Pressure regulating valve
11 DHW limit stat
12 Open Therm sensor
13 Automatic air vent
14 DHW therm stat
15 3 way motorised valve
16 Radiators
17 Pressurisation unit and fast fill loop

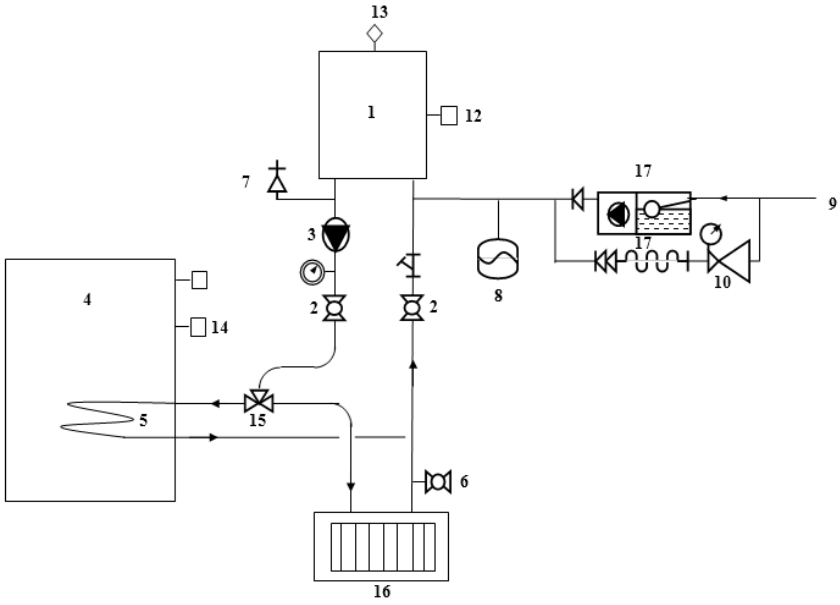

POWER CONTROL

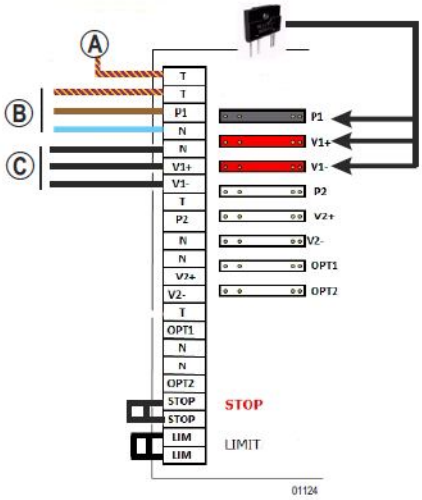

DIGITAL CONTROL

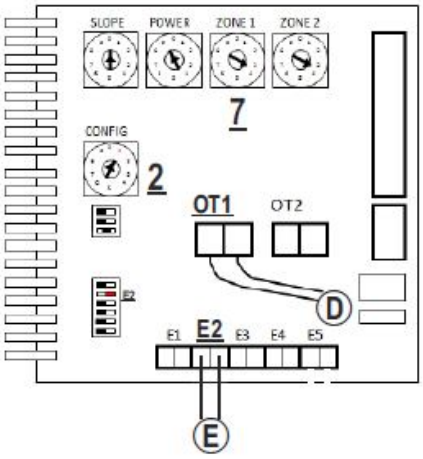

A Earth
B Pump
C 3-way motorised valve
D Open therm 1
E Sonde ECS PT1000

3. Two zones; One radiator heating zone & one underfloor heating zone

1 CER Boiler
2 Isolating valve
3 Radiators
4 Underfloor heating temperature limit
5 Underfloor heating
6 System drain valve
7 Underfloor heating pump
8 Expansion vessel
9 Cold water supply
10 Pressure regulating valve
11 Pressurised unit
12 Sensor Open Therm 1
13 Sensor Open Therm 2
14 automatic air vent
15 Radiator pump
16 Radiator non-return valve
17 Sensor PT1000-E4

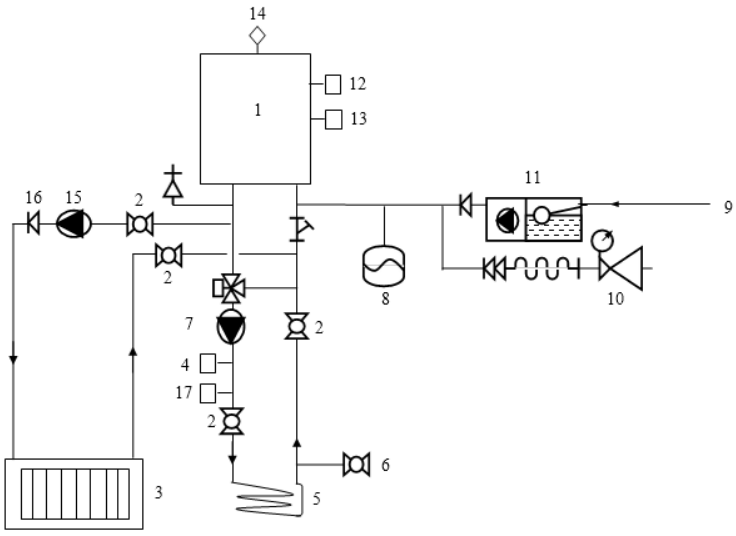

POWER CONTROL

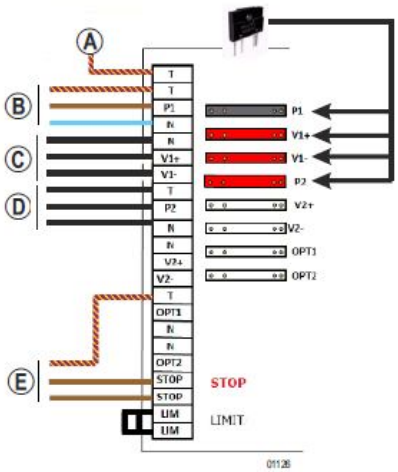

DIGITAL CONTROL

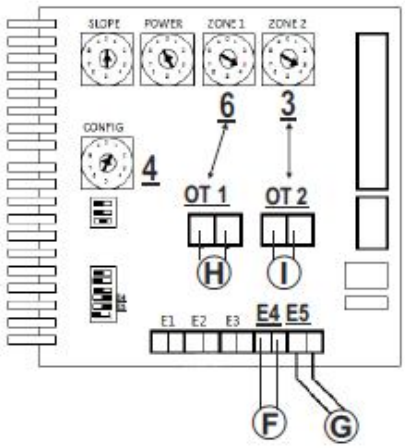

A Earth
B Radiator pump
C 3-way mixing valve
D Underfloor heating pump
E Underfloor heating temperature limit

F Underfloor heating PT1000 flow sensor
G External temperature PT1000 sensor
H Sensor Open Therm 1
I Sensor Open Therm 2 (underfloor)

4. Two zones : One radiator heating zone, one underfloor heating zone & DHW

1 CER Boiler
2 Isolating valve
3 Radiators
4 Underfloor heating temperature limit
5 Underfloor heating
6 System drain valve
7 DHW limit stat
8 Expansion vessel
9 Cold water fill
10 Pressure regulating valve
11 Pressurisation unit
12 Sensor Open Therm 1
13 Sensor Open Therm 2
14 automatic air vent
15 Radiator pump
16 Sensor PT1000-E3
17 Sensor PT1000-E4
18 Underfloor heating pump
19 Domestic hot water expansion vessel,
Temperature & pressure relief valve
Domestic hot water temperature limit stat
20 Primary exchanger

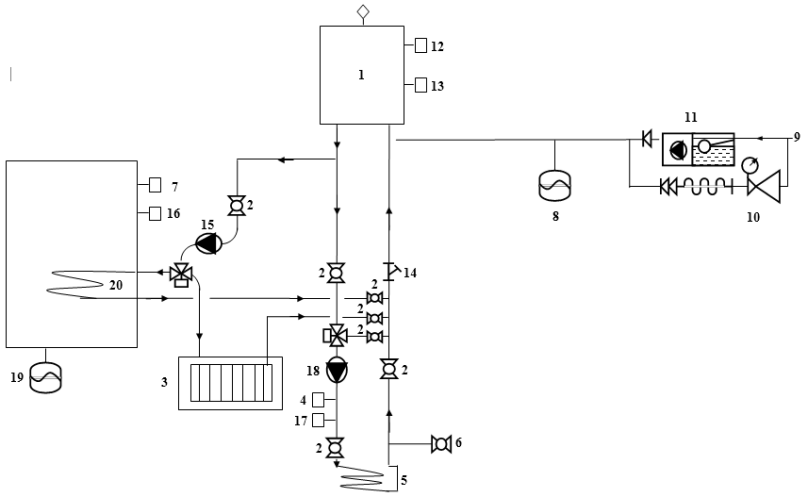

POWER CONTROL

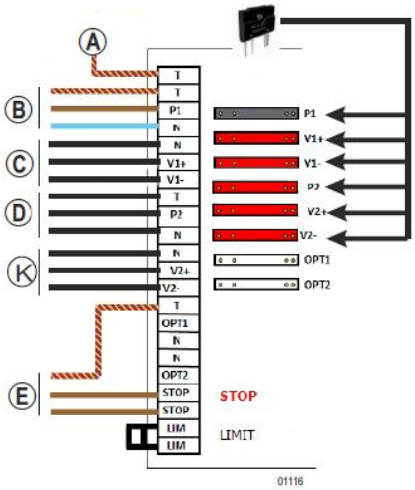

DIGITAL CONTROL

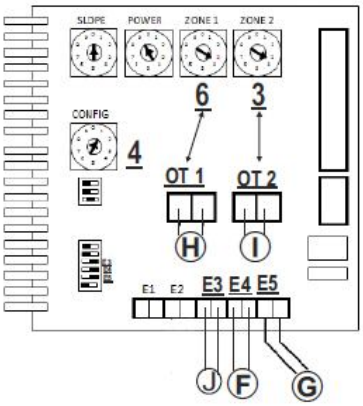

A Earth
B Radiator pump
C Radiator 3-way motorised valve
D Underfloor heating pump
E Underfloor high temperature limit
F PT1000 sensor at 3-way valve outlet
G PT1000 external sensor
H Open Therm Sensor 1
I Open Therm underfloor heating Sensor b2
J PT1000 DHW sensor
K DHW 3-way motorised valve

4. COMMISSIONING THE SYSTEM, using the red or green signals of the DIGITAL CONTROL PANEL

GREEN SYSTEM – normal functioning

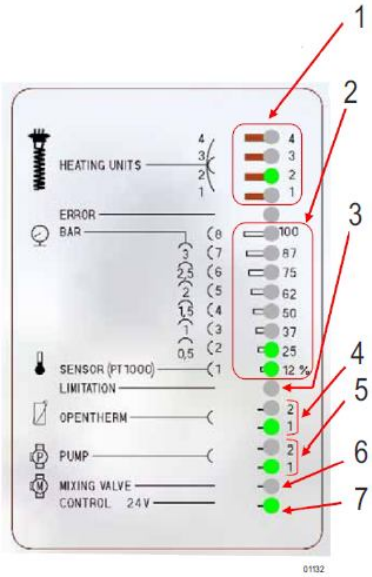

1. The four LED lights indicate the operation of the four immersion heaters
2. The column of LED lights indicate the percentage output at any one time
3. This one LED indicates a limit to the power output
   - either a fixed RED light limit set by the codes in the boiler control
   - or a winking RED light caused by the boiler or circuit going over limit
4. These LEDS indicate that the OPEN THERM sensors are in operation
5. These LEDS indicate that the PUMPS are in operation
6. This LED indicates that either 3-way valve is in operation
   GREEN light – space heating priority: RED LIGHT – DHW priority
7. This LED indicates that the OPEN THERM sensors are receiving 24 volts

4.1 INDICATION OF ERRORS

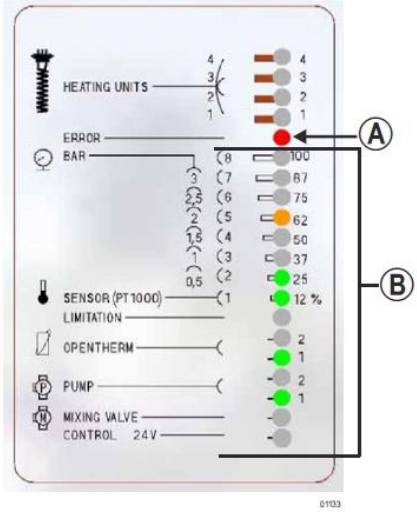

The DIGITAL CONTROL PANEL can detect and diagnose faults as they occur. The LED "A" will wink either in GREEN, ORANGE or RED.

FLASHING GREEN - no error
FLASHING ORANGE – error in wiring or connection
FLASHING RED - boiler in lock-out condition

The error is indicated by a red or orange light in the range of LED lights "B"

LED 7	ORANGE	High temperature over-heat/Low water pressure RED
LED 8	ORANGE	URGENT High temperature lock-out on underfloor floor heating or blown fuse on electrical supply RED

FLASHING ORANGE – error in wiring or connection
The error is indicated in ORANGE or RED in one of the LED's below LED ERROR

1	RED	Short circuit
1	ORANGE	Faulty connection
2	RED	Short circuit
2	ORANGE	Faulty connection
3	RED	Short circuit
3	ORANGE	Faulty connection
4	RED	Short circuit
4	ORANGE	Faulty connection
5	RED	Short circuit
5	ORANGE	Faulty connection
7	RED	PT1000 in Short circuit
7	ORANGE	PT1000 in Faulty connection
8	RED	PT1000 in Short circuit
8	ORANGE	PT1000 in Faulty connection
OPENTHERN 2	RED	OPENTHERM 2 in Short circuit
OPENTHERM 2	ORANGE	OPENTHERM 2 in Faulty connection
OPENTHERN 1	RED	OPENTHERM 1 in Short circuit
OPENTHERM 1	ORANGE	OPENTHERM 1 in Faulty connection
PUMP 2	ORANGE	pump two failed
PUMP 1	ORANGE	pump one failed
MIXING VALVE	ORANGE	valve failed
CONTROL 24V	RED	failed voltage
CONTROL 24V	ORANGE	voltage too high

4.2 ELECTRIC DRAWINGS

POWER CIRCUITRY – Single phase

TB1 to TB4	lock-out thermostats set at 115degC	**R1 to R4**	immersion heaters each 2kW or 3kW 240V
C1	Capacitor	**RLS11-12 & RLS21-22**	double circuit relays
KM1 & KM2	4-pole contactors		
ACC	voltage to the control circuit		

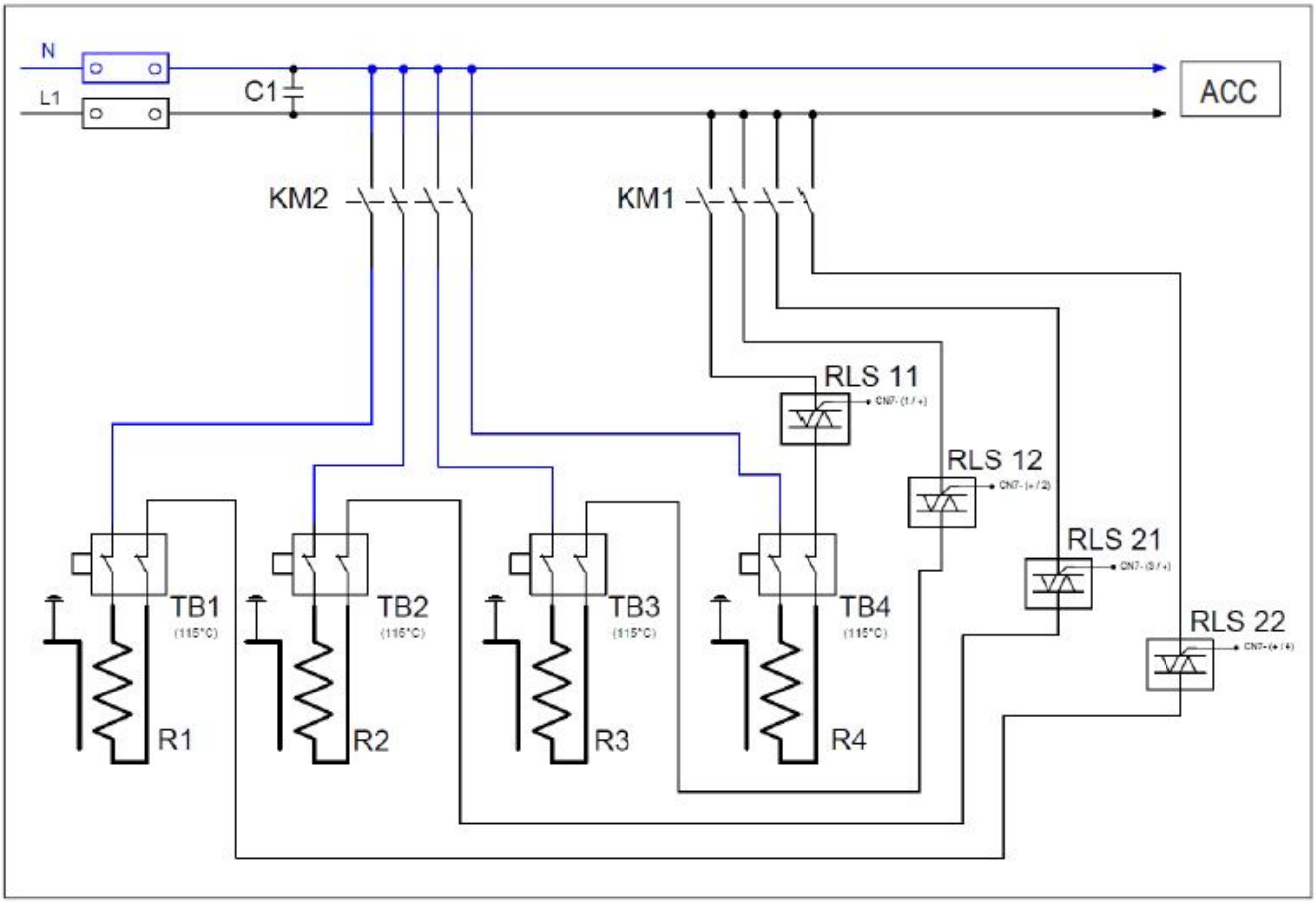

CONTROL CIRCUITRY - Single phase

A1	Aquastat 0-90degC	V1 – V2	LED's GREEN/RED
S1	Modulating control	KM1-2	4 pole contactors
CO	Open Therm controller	T1 – T4	manual re-set STATS
CP	8 step controller	APP	voltage from Power circuit
DX1	Step Controller		
P1	Minimum pressure-stat		

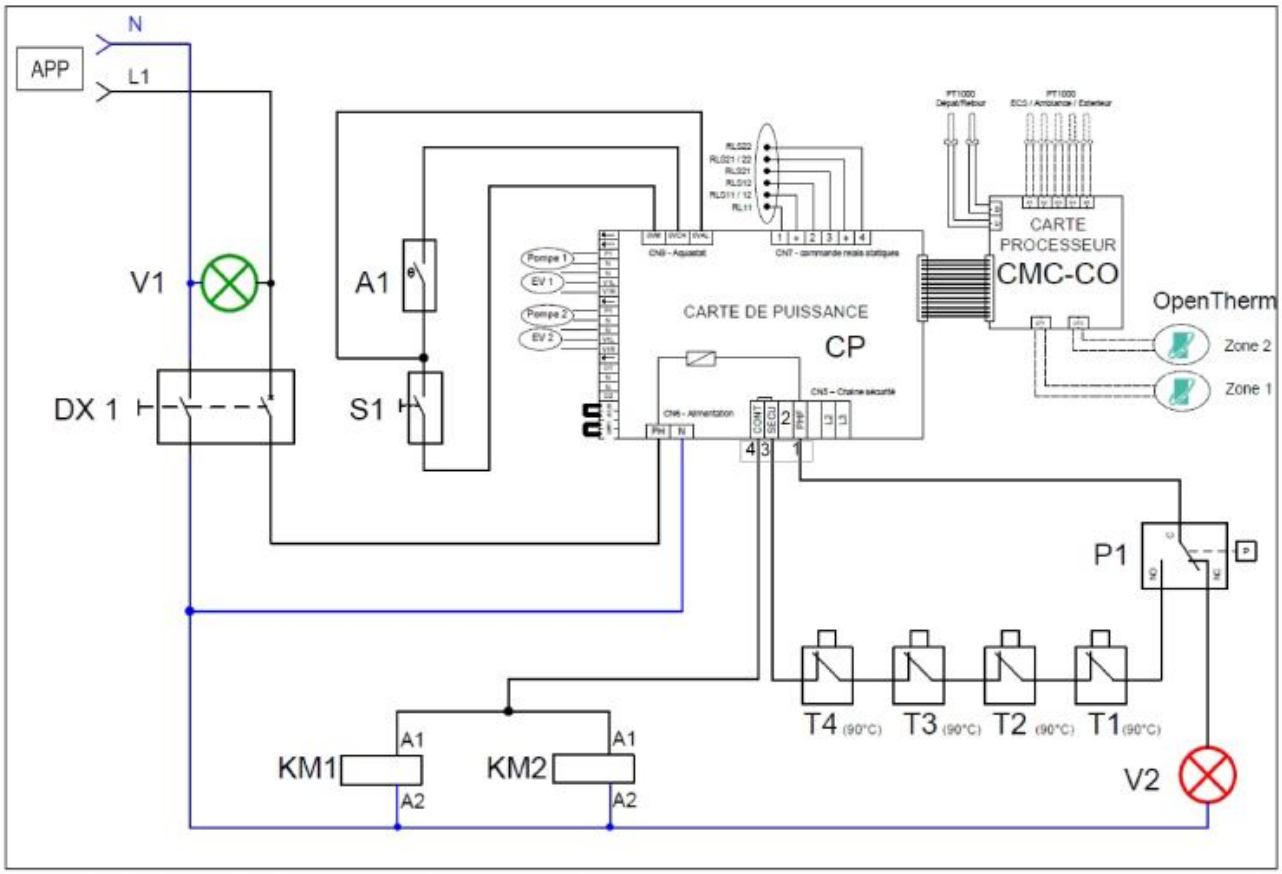

POWER CIRCUITRY – Three phase

KM1 & KM2	4-pole contactor	R1 to R3	immersion heaters each single coil, 3kW 415V
C1-3	capacitors	R4	immersion heater three coil 3.1kW, 415V
TB1 to TB3	lock-out thermostats set at 115degC	RLS11-12 & RLS21-22	- double circuit relays
ACC	voltage to the control circuit		

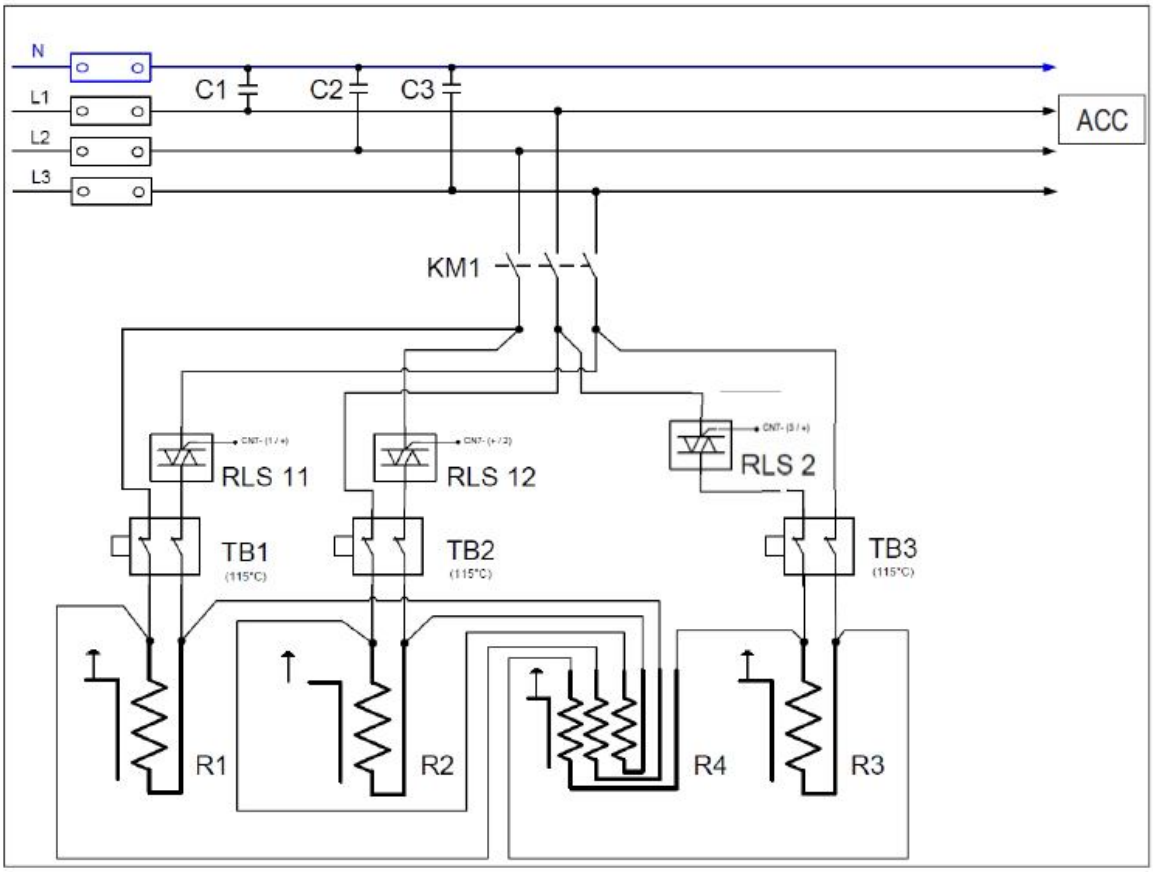

CONTROL CIRCUITRY - Three phase

A1	Aquastat 0-90degC	V1 – V2	LED's GREEN/RED
CMC	Modulating control	KM1	4 pole contactor
S1	Modulating isolator	T1 – T4	manual re-set STATS
CO	Open Therm controller	DX1	Step Controller
CP	8 step controller	P1	Minimum pressure-stat
APP	voltage from Power circuit		

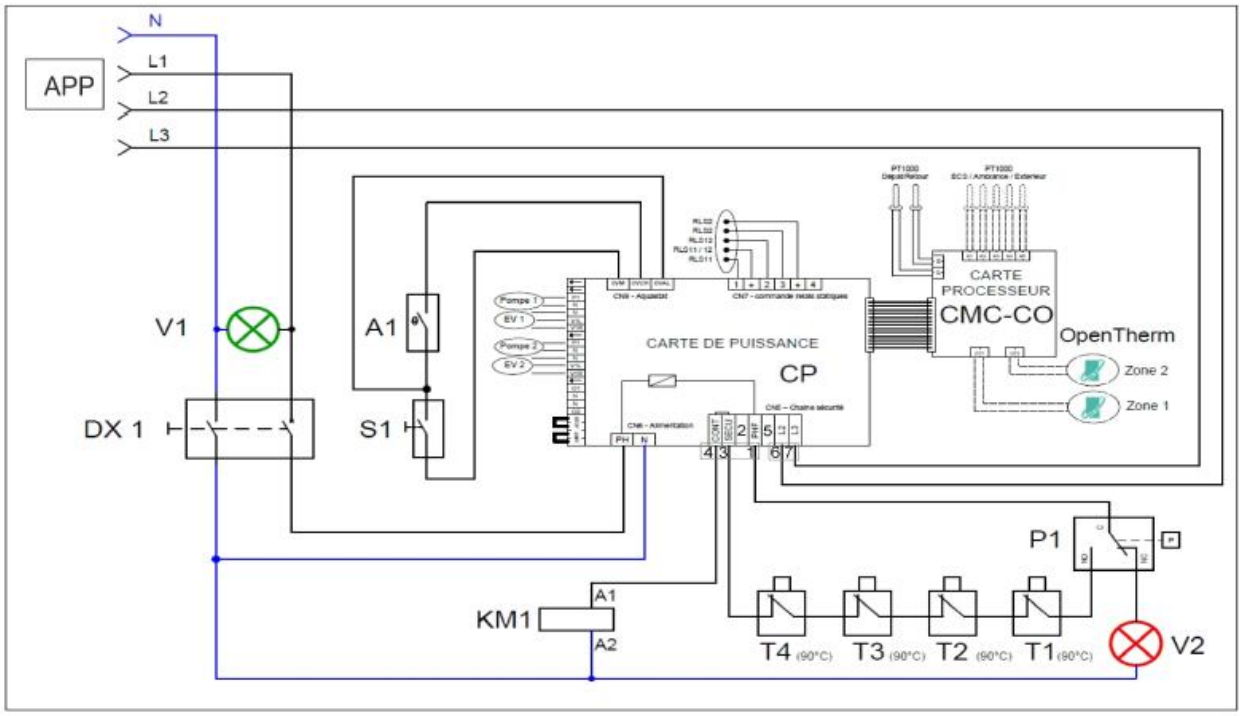

4.3 DIGITAL CONTROL

The control operates partly at 5V and partly at 24V

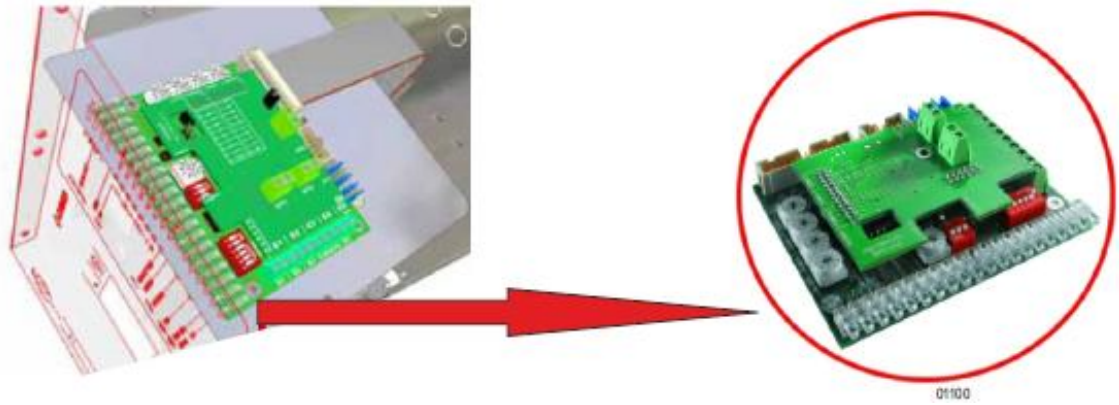

All cables on the above services must be clamped for safety – no loose wires at any stage
The room sensor must be carefully located.
It must not be located, for example

A. On a cold entry
B. On an external wall
C. Around a staircase

The usual working pressure is 1.4BARS – increasing when hot to 2.4BARS maximum
Below 0.8BARS, the boiler stops and signals low pressure.

Control valve circuits are shown on pages
A programmable thermostat is needed for the domestic hot water circuits
An external sensor is a recommended addition for underfloor heating circuits.

Consult ATLANTIC BOILERS for the size of the expansion vessel
Provide the boiler with isolating valves and a drain plug.

When connecting the boiler to an existing circuit, beware of the presence of sediment.
Consult ATLANTIC BOILERS on sediment removal and water treatment.
Consider fitting a PT1000 clip-on sensor on the flow which, wired to terminal (CLIP-ON), gives a useful reading of temperature.

For an underfloor heating system, give protection against over-heat by a thermostat
Set at 50° maximum, located in the circuit flow and wired to terminal (STOP).

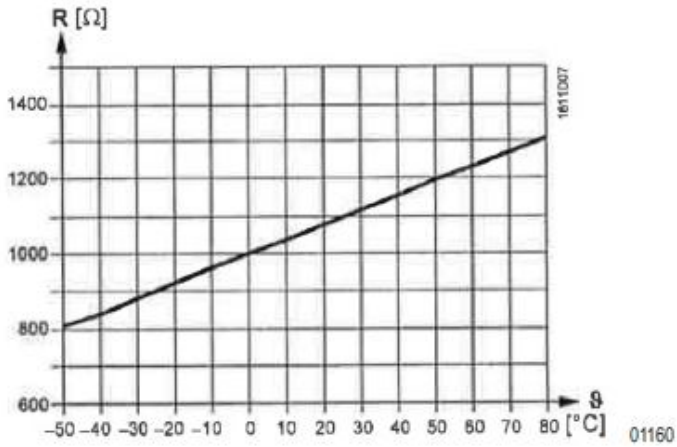

5. SPARE PARTS

Description	Order reference	Part number
Boiler body	3000 19906	
EPDM gasket 24.2*3	19908	
Automatic air vent 3/8”	19909	
Anti-vibration feet	19920	
3.5BARS safety valve	19921	
Flow pipe	19922	
Return pipe	19923	
¾” female to 1” male adaptor	19924	
Modulating isolator	19925	
4 pole contactor	19926	SPM CE01P1-5.8
		SPM CE01P1-5.12
Capacitor 1 microfarad	19928	SPM CE01P1-5.8
		SPM CE01P1-5.12
Capacitor 2 microfarad	100020070	SPM CE01P3-5.12
90degC manual re-set lock-out thermostat	300019929	
115degC manual re-set lock-out thermostat	19933	
16kW 4 pole contactor	19935	SPM CE01P3-5.12
Modulating LED (red/green)	19938	
2 amps overload	19939	
Single static relay	19941	
Double static relay	19942	SPM CE01P3-5.12
Aquastat red button	19944	
Digital controller	19945	
Boiler output controller (8 ways)	19946	
Single coil immersion heater 3kW 240V	19947	SPM CE01P1-5.12
Single coil immersion heater 2kW 240V	19950	SPM CE01P1-5.8
Single coil immersion heater 3kW 415V	100020071	SPM CE01P3-5.12
Triple coil immersion heater 3.1kW 415V	20072	SPM CE01P3-5.12

Open therm digital controller	300019916	
Alarm condition isolator kit	19917	
PT1000 sensor	19918	
Aquastat 0 – 90degC	19919	
Terminal kit, mounted on DIN rail (3 connectors, green/yellow)	300019878	SPM CE01P3-5.12
Terminal kit, mounted on DIN rail (4 connectors, blue)	19879	SPM CE01P3-5.12
Terminal kit, mounted on DIN rail (4 connectors, beige)	19890	SPM CE01P3-5.12
Coverplate for terminals	19891	SPM CE01P3-5.12
	19900	SPM CE01P1-5.8
		SPM CE01P1-5.12
Warning word plate for three phase supply	19892	
Stop plate	19893	
Terminal kit, mounted on DIN rail (2 connectors, green/yellow()	19894	
Terminal kit, mounted on DIN rail (2 connectors, blue)	19895	
Terminal kit, mounted on DIN rail (2 connectors,grey)	19896	
Terminal kit, mounted on DIN rail (2 connectors, blue)	19897	
Terminal bridge	19899	
Pressure switch	19903	
Set of wires	19966	SPM CE01P3-5.12
	19965	SPM CE01P1-5.8
		SPM CE01P1-5.12
Set of screws	19960	